Frame Preparation

Adjusting Horizontal and Lockdown

14. LOOSEN the two 1/4”-20 x 1“ mounting screws.
15. ADJUST strike to appropriate horizontal position.
16. TIGHTEN the two 1/4”-20 x 1“ mounting screws.
17. SECURE the adjustment by tightening the set screws.
18. INSTALL the #10-32 UNF or 10-24 UNC lockdown screw (optional).

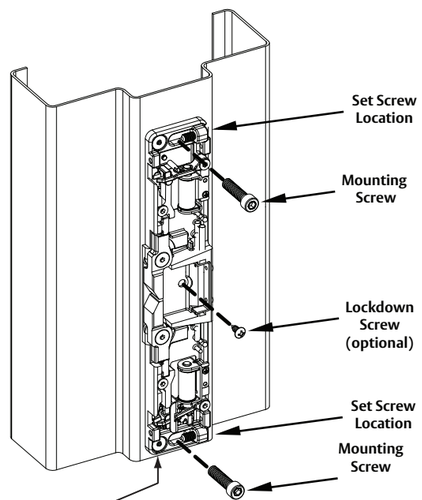

HELPFUL TIP: Two rare earth magnets are provided to capture magnetic debris resulting from normal wear on the exit device. Compressed air can be used to remove captured debris during routine maintenance.

Installing the Cover

19. ATTACH the cover using the #6-32 x 1/4” Cover Screws.

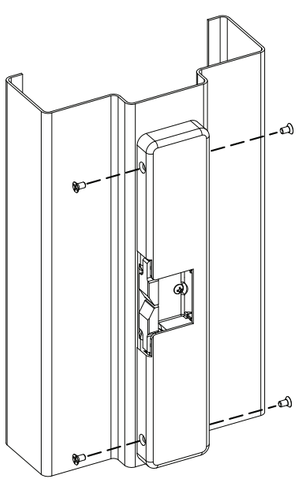

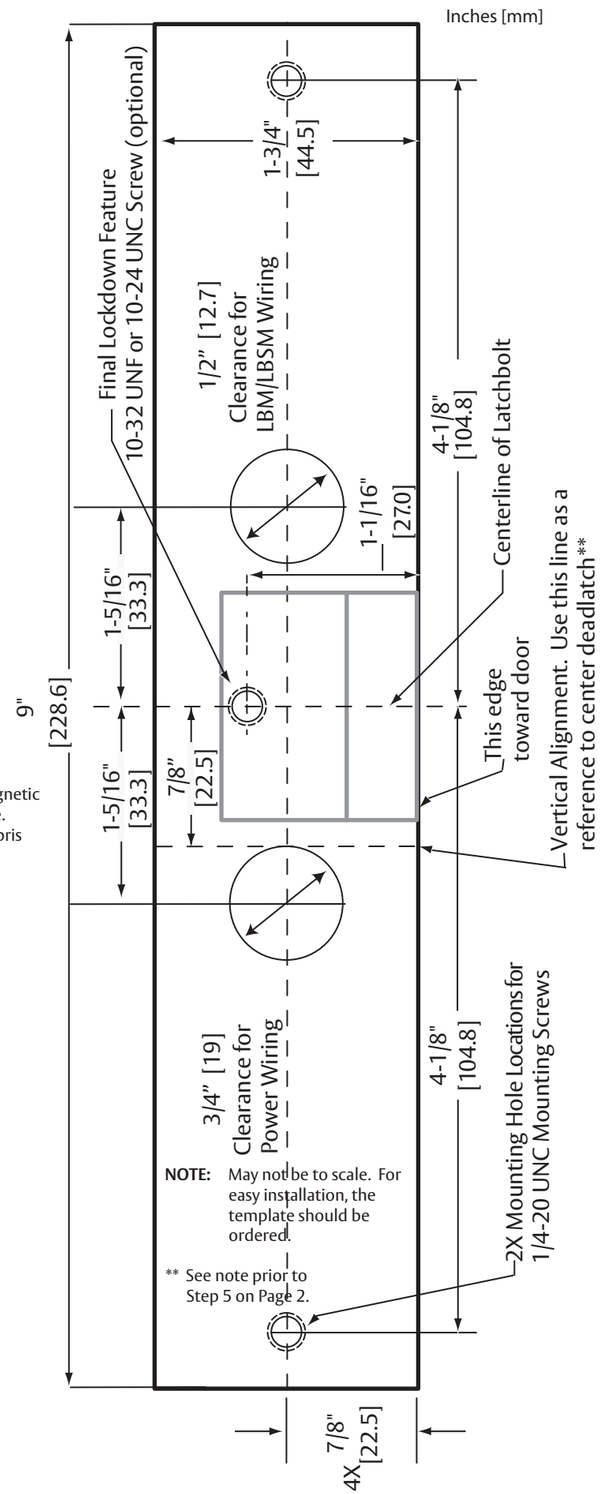

NOTE: May not be to scale. For easy installation, the template should be ordered.

** See note prior to Step 5 on Page 2.

3026006.004 rev A

© 2015, Hanchett Entry Systems, Inc., an ASSA ABLOY Group company.

9400/9500/9600/9700 Series Electric Strikes

Installation Instructions

HES, Inc.
Phoenix, AZ
800-626-7590
www.hesinnovations.com

Product Components

1. 9400/9500/9600/9700 Strike Body
2. 9400/9500/9600/9700 Cover
3. 1/4”-20 x 1” Mounting Screws
4. #10-32 & 10-24 Lockdown Screws (optional)
5. #6-32 x 1/4” Cover Screws
6. 5/64” Hex Key
7. 12-Volt and 24-Volt Pigtails

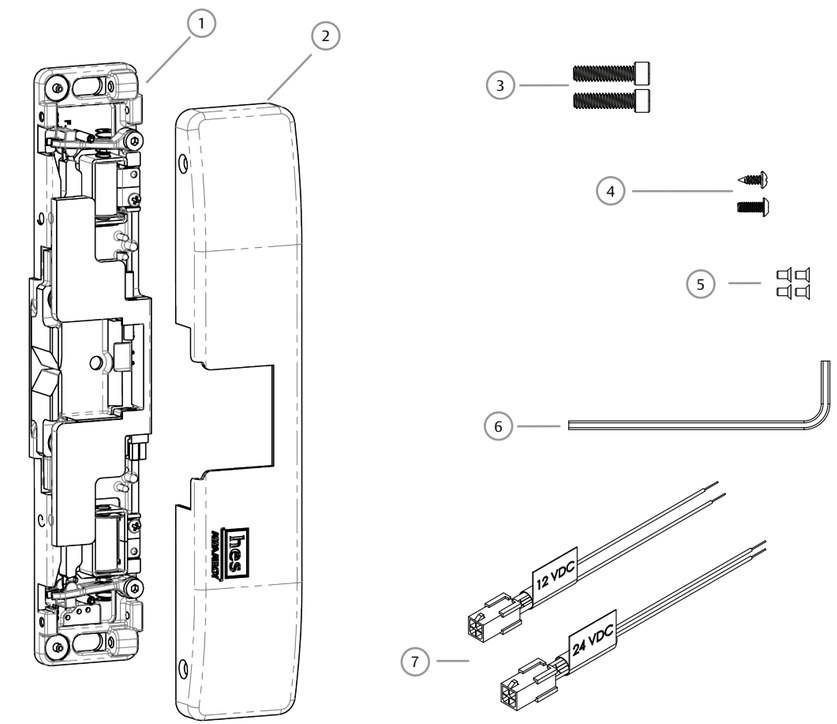

Diagram 1: Product Components

Electrical Specifications

Electrical Ratings for Solenoid		
Continuous Duty	12 VDC	24 VDC
Resistance in Ohms	24	96
Amps	.50	.25
Solenoids are rated at +/- 10% indicated value.		

Minimum Wire Gauge Requirements (Based on Round Trip)	Solenoid Voltage	
	12 VDC	24 VDC
200 feet or less	18 gauge	22 gauge
200 – 300 feet	16 gauge	22 gauge
300 – 400 feet	16 gauge	20 gauge

ASSA ABLOY, the global leader in door opening solutions

Installation

CAUTION!
Before connecting any device at the installation site, verify input voltage using a multimeter.
Many power supplies and low voltage transformers operate at higher levels than listed. Any input voltage exceeding 10% of the solenoid rating may cause severe damage to the unit and will void the warranty.

Preparing the Strike

NOTE: For 12 VDC, the Plug In Connector (pigtail) marked "12 VDC" should be used; for 24 VDC, the pigtail marked "24 VDC should be used.

1. SELECT the appropriate pigtail that matches system power and electrically CONNECT as illustrated in Diagram 2.

2. **IF** no connector is present,
   THEN CONFIGURE the wires as shown in Diagram 2.

3. **IF** using the Latchbolt Monitor (LBM) or Latchbolt Strike Monitor (LBSM),
   THEN REFER to Diagrams 3 and 4 on Page 3 to complete wiring.

NOTE 1: The 9400/9500/9600/9700 ships in FAIL SECURE OPERATION mode.

NOTE 2: FAIL SAFE OPERATION mode should not be used in fire or windstorm-rated applications.

4. CONVERT the 9400/9500/9600/9700 to FAIL SAFE OPERATION, if needed, using Diagrams 5 and 6 on Page 3 as a guide.

Preparing the Frame

NOTE: When using a Corbin Russwin Series 5000 or Yale 7000 series equipped with an offset deadlatch, the deadlatch is located just above the Vertical Alignment line, as shown on the Installation Template on Page 4.

5. PREPARE the door jamb using the Installation Template located on Page 4 (with the exception of the hole for final lockdown).

Finishing the Installation

6. Electrically CONNECT the 9400/9500/9600/9700 to the Plug In Connector, and ATTACH the electric strike to the jamb using the 1/4"-20 x 1" mounting screws provided.

7. CHECK latchbolt interaction to determine if horizontal adjustment is needed, and ADJUST as needed; then LOCK DOWN the horizontal adjustment using the #10-32 set screws as illustrated on Page 4.

8. OPTIONAL LOCKDOWN FEATURE: INSTALL the #10-24 UNC or 10-32 UNF lockdown screw if additional security is required; however, REMOVE the strike before drilling hole.

9. INSTALL the cover plate, and SECURE in place using the #6-32 x 1/4" Cover Screws as illustrated on Page 4.

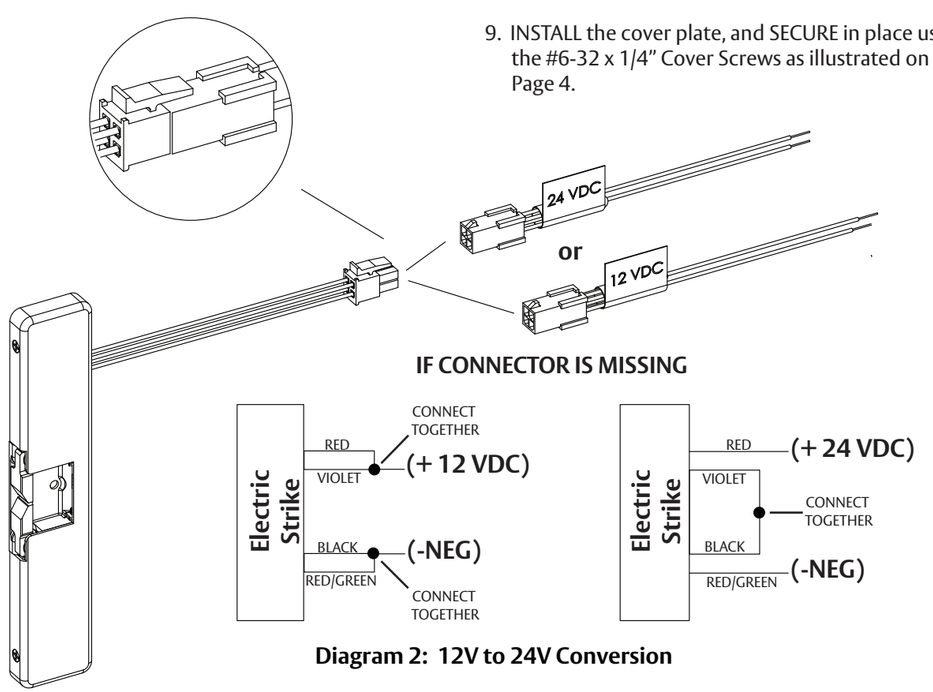

Diagram 2: 12V to 24V Conversion

Installation (continued)

LBM Wiring

White	Common
Orange	Normally Open
Green	Normally Closed

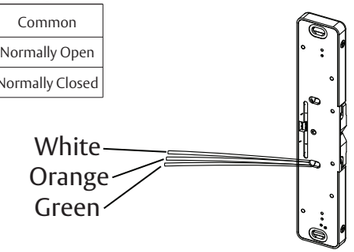

Diagram 3: Latchbolt Monitor

LBSM Wiring

Brown	Common
Blue	Normally Open
Yellow	Normally Closed

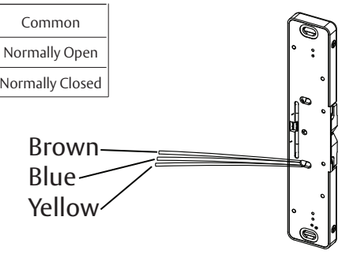

Diagram 4: Latchbolt Strike Monitor

Converting the Operation Mode

NOTE 1: The 9400/9500/9600/9700 series Electric Strikes are pre-set for FAIL SECURE OPERATION as shown in Diagram 5.

NOTE 2: There are Selector Stop Pins, one on the left side and one on the right side. Both Selector Stop Pins must be repositioned to convert the strike to FAIL SAFE OPERATION.

10. To convert to FAIL SAFE OPERATION, REMOVE the Selector Stop Pins on each side of the strike body using the provided 5/64" hex key.

11. MOVE the Selector Stop Pins to the FAIL SAFE OPERATION position (towards the center of the strike) as pictured in Diagram 6.

12. TIGHTEN both Selector Stop Pins after they have been moved to the FAIL SAFE OPERATION position using the 5/64" hex key.

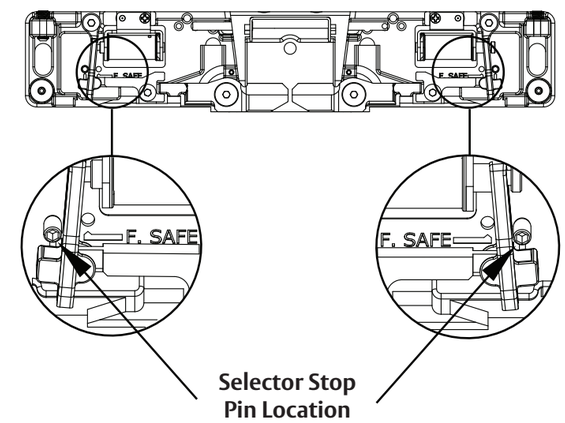

Diagram 5: FAIL SECURE OPERATION

Verifying the Operation Mode

NOTE: Both keepers should be unlocked without power, but lock when power is applied.

13. VERIFY that both keepers are in FAIL SAFE OPERATION.

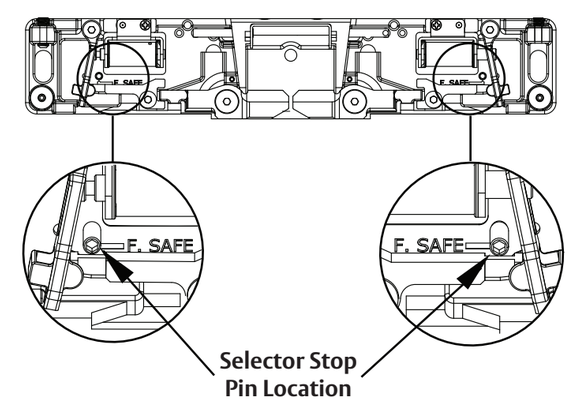

Diagram 6: FAIL SAFE OPERATION